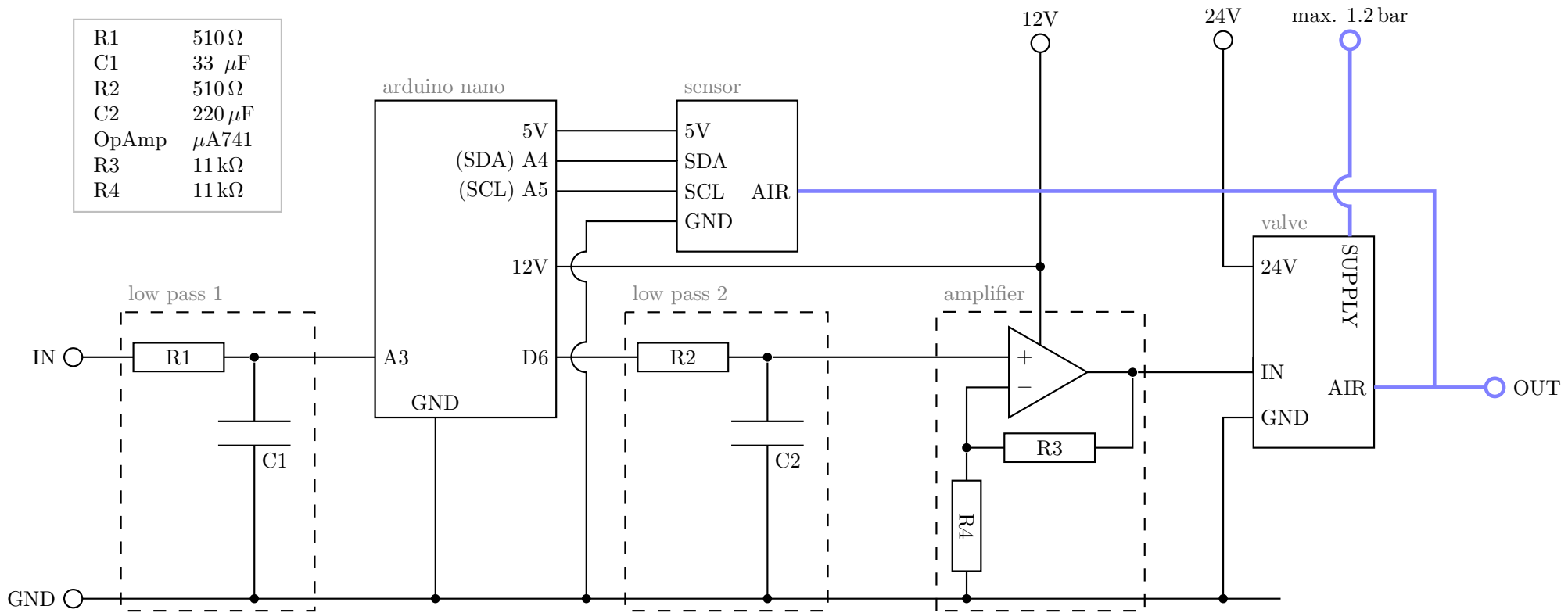
R1 510 Ω
C1 33 μF
R2 510 Ω
C2 220 μF
OpAmp μA741
R3 11 kΩ
R4 11 kΩ
arduino nano
5V
(SDA) A4
(SCL) A5
12V
A3
D6
GND
sensor
5V
SDA
SCL
GND
AIR
12V
24V
max. 1.2 bar
valve
24V
SUPPLY
IN
AIR
GND
OUT
low pass 1
IN
R1
C1
low pass 2
R2
C2
amplifier
+
−
R3
R4
GND