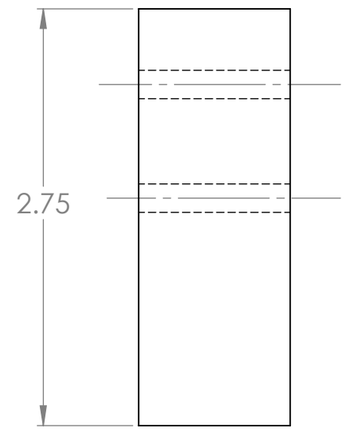

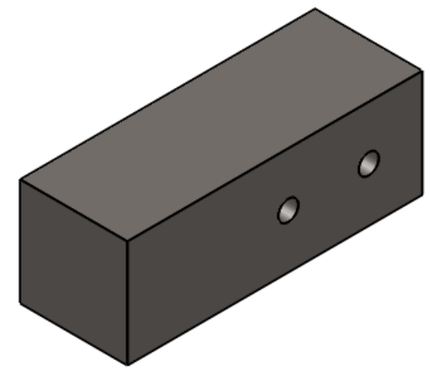

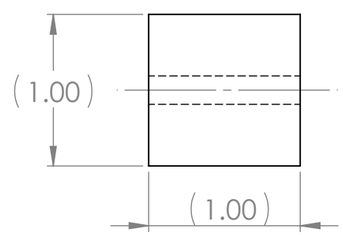

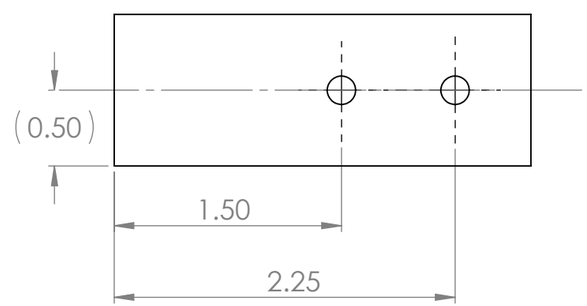

SolidWorks Student Edition.
For Academic Use Only.

COMMENTS:			INSTRUCTORS Lipsett, Carey, Duke, Kostiuk, Ackerman	PIVOTAL SOLUTIONS
	NAME	DATE	UNLESS OTHERWISE SPECIFIED:	CLIENT: Dr. Albert Vette
DRAWN	BKOC	04/08/13	DIMENSIONS ARE IN INCHES TOLERANCES: ANGULAR: ±0.5° 0.X = ±0.1 0.XX = ±0.01 0.XXX = ±0.005 FRACTION = ±1/32	TITLE: Leg Knee
CHECKED	ATZ	04/09/13		
MODEL	BKOC	03/28/13		
REV A	-	-		
REV B	-	-	MATERIAL 1045 Cold Drawn Steel	SIZE B / DWG. NO. PS-LS-06 / REV -
REV C	-	-	FINISH 63 µin OR BETTER	
REV D	-	-		
DEBUR AND BREAK SHARP EDGES			DO NOT SCALE DRAWING	SCALE: 2:1 / SHEET 1 OF 1

Created with PTC Creo Parametric 2.0 M010